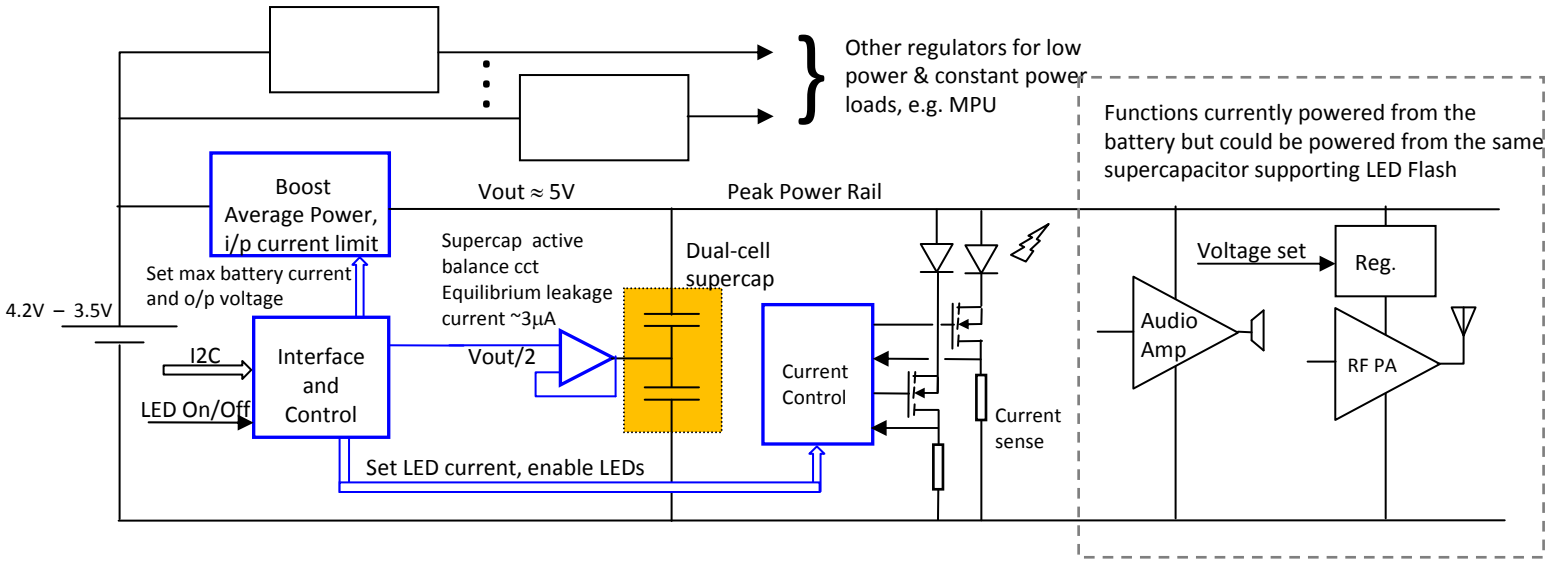
Other regulators for low power & constant power loads, e.g. MPU
Functions currently powered from the battery but could be powered from the same supercapacitor supporting LED Flash
Boost Average Power, i/p current limit
Vout ≈ 5V
Peak Power Rail
Supercap active balance cct Equilibrium leakage current ~3µA
Dual-cell supercap
Set max battery current and o/p voltage
4.2V – 3.5V
I2C
LED On/Off
Interface and Control
Vout/2
Current Control
Current sense
Voltage set
Reg.
Audio Amp
RF PA
Set LED current, enable LEDs