CAP-XX

Units 9-10/12 Mars Road
Lane Cove NSW 2066
Australia

Tel +61 2 9420 0690
Fax +61 2 9420 0692
www.cap-xx.com

CAP-XX Pty Limited
ABN 28 077 060 872
ACN 077 060 872

CAP-XX APPLICATION NOTE No. 1004

Driving High-Power White LED Flash in Camera Phones

Outline

Supercapacitors with low ESR (Equivalent Series Resistance) and high capacitance are ideal components for use in pulsed-power applications, such as Flash LEDs and GPRS transmitters, in which the load draws large pulses of current. When connected across the supply, they provide much of the energy needed by each load pulse, reducing voltage ripple, instantaneous supply current and extending battery run time. However, supercapacitors draw a high charging current when the unit is turned on which may cause a battery to shut down. This application note describes supercapacitor based power circuits that provide peak power to drive Flash LEDs, support GPRS transmission and manage inrush current.

The Problem

As the resolution of camera phones increases to 2M Pixel and above, the light level required to take good photos increases dramatically. To achieve these light levels, white Flash LEDs must be driven at high currents in the order of 1A – 2 A. To compound the problem, at these high currents the forward voltage across the LED may be up to 4.8V. Allowing 200mV overhead for the current control circuitry, the total load voltage during a flash may be up to 5V. This means a boost converter is needed. If the battery voltage is 3.5V, and the boost converter is 90% efficient, the battery would need to supply over 3A for the duration of a 2A flash pulse. This will either cause the battery protection circuit to shut the battery down or cause a low voltage shutdown with plenty of energy still remaining in the battery.

The CAP-XX Solutions

CAP-XX proposes 3 solutions using a supercapacitor to support the battery to provide pulse power for the LED Flash and in some cases, also provide pulse power for GPRS transmission. These are:

A. Place the supercapacitor at the input to a boost or buck-boost converter. This requires a separate current limit between the battery and supercapacitor. The supercapacitor must be a dual cell device rated for 4.5V continuous operation.

B. Place the supercapacitor at the output of a buck-boost converter. This solution requires a dual-cell supercapacitor rated for 4.5V continuous operation with short excursions up to 5.5V. Select a buck-boost converter whose current limit function can also limit supercapacitor inrush current at power up.

C. Place the supercapacitor in series with the battery. This requires only a single cell supercapacitor which is thinner and lower cost and there is no inrush current problem, but the battery current = load current.

Solution A: Supercapacitor at the input to a DC:DC converter

Fig 1 shows a block diagram of Solution A. This solution can support both white LED Flash and GPRS transmission. It requires a dual-cell supercapacitor and balancing circuit. There are two modes of operation: Flash mode, where the DC:DC converter o/p voltage (V_{OUT}) is set to provide sufficient forward voltage to drive the Flash LED at the Flash current level, or Torch mode where V_{OUT} is set at the optimum voltage for the RF PA or GPRS module (typically 3.6V – 3.8V), and drives the LED at a lower continuous current, typically 200mA. The circuit blocks are described below:

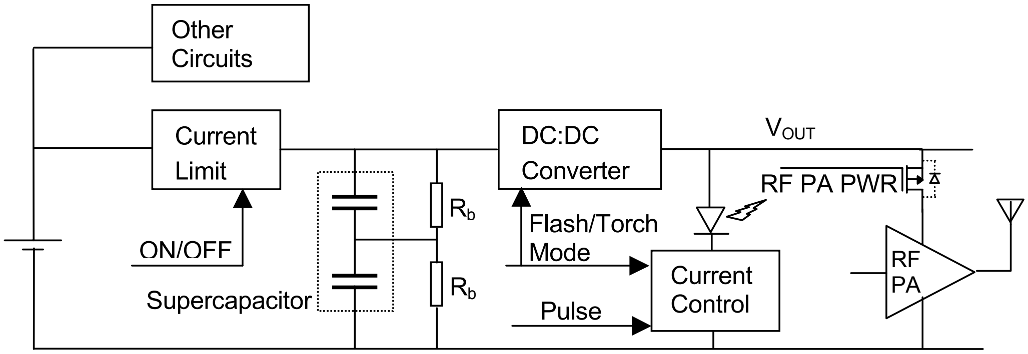

Figure 1: Solution A Block Diagram

Other Circuits: Low power logic circuits that are required to be active always, even when the phone is switched off, should be driven directly off the battery.

The current limit block is required to manage the inrush current on power up. Consider a battery pack with an impedance of 120mΩ and a supercap with an ESR = 80mΩ. If the battery is at 3.7V then the inrush current = 3.7V/200mΩ = 18.5A. A suitable current limit IC for this purpose is the AAT4601A from AnalogicTech. Alternatively, consult CAP-XX application note AN1002 on current limit solutions. The current limit should be set with a slight margin above that needed for the average power. Since the flash pulse is at a very low duty cycle, typically 50-100msec every 1 – 2 secs in order to prevent the LED junction temperature from exceeding its maximum, the GPRS transmission load will set this limit. As an example, if the phone performs GPRS class 12 (50% duty cycle), and requires 2A peak during transmission, and other circuits drawing their power from the output of the DC:DC converter requires 100mA, then the current limit should be set for so the DC:DC o/p average current > 1.1A. Assuming a minimum battery voltage = 3.0V, an RF PA voltage = 3.6V, and 85% efficiency, input current = 1.1A x 3.6V/3.0V/85% = 1.55A, therefore set the current limit to 1.6A. The current limit block also decouples the supercap voltage from the battery voltage. The supercap can discharge to the minimum input required for the DC:DC converter and the flash LED, RF PA and any other circuits drawing their supply from the output of the DC:DC converter will still function correctly. Finally, if the phone is turned off then the current limit IC can also be turned off. This prevents supercapacitor leakage current + balancing circuit current (as well as leakage current from any other circuits) from draining battery energy.

Supercapacitor selection The load requiring the greatest energy storage will be the 50 – 100msec flash pulse. This will set the minimum size for the supercapacitor. Assume the thermal recovery time for the LED is greater than the time to recharge the supercap after a flash pulse. In this instance the supercap can be sized using the Voltage Decay spreadsheet tool available on the CAP-XX web site:

http://www.cap-xx.com/resources/designaids/CXX_VoltageDecaySim.xls

Since the supercapacitor is supplying a DC:DC converter the “Fixed Power” sheet should be used. As an example, if the LED current is 2A and the forward voltage is 4V then the o/p power = 8W. If the DC:DC converter is 85% efficient, then the supercap will provide 8W/0.85 = 9.4W. Assume the battery voltage = 3.3V and the minimum i/p voltage the the DC:DC converter = 2.5V. If the current limit supplying the supercapacitor is set to 1.3A then the average power the battery will provide the supercapacitor during the flash pulse = (3.3V + 2.5V)/2 x 1.3A = 3.8W. In the fixed power sheet set:

Load Power = 9.4 – 3.8 = 5.6W

Initial voltage = 3.3V

Load duration = 0.1s

Then choose ESR & C based on the CAP-XX product range from our web site at http://www.cap-xx.com/products/products.htm and check that the min voltage > min voltage required for operation of the DC:DC converter. For conservative design, use double the ESR value and ¾ of the C value quoted from the Product Bulletin in the Voltage Decay Simulator design tool. In this example, a GS206 is 550mF / 50mΩ. Therefore, using 0.55 x 0.75 = 0.4125F as a value for C and 2 x 50mΩ = 100mΩ as a value for ESR gives an acceptable voltage droop (min voltage at end for flash pulse > 2.5V), so choose a GS206. Table 1 shows the values taken from the Fixed Power sheet of the Voltage Decay Simulator.

ESR:	100	mOhm
Capacitance:	0.4125	F
Load power:	5.6	W
Load duration:	0.1	secs
Initial Voltage	3.30	V
Voltage droop:	0.69	V
Min voltage	2.61	V
Time Step:	0.0001	Secs

Table 1 – Voltage Decay Simulator Parameters, Fixed Power sheet

Balancing circuit: Two supercapacitor cells in series require a balancing circuit to prevent any imbalance in leakage current between the two cells to cause one cell to go over-voltage. The simplest balancing circuit is a pair of resistors as shown in Fig 1. The balancing resistors must draw an order of magnitude more current than the supercap leakage current over the operating temperature of the unit. At 70°C, leakage current is in the range of 3-5μA. CAP-XX recommends a pair of 39KΩ resistors. This draws 46μA at 3.6V. To reduce this drain on battery energy either the current limit can be turned off when the phone is turned off, and/or the balancing resistors can be replaced with an active balance circuit which will draw < 3μA (including supercapacitor leakage current) at room temp. Contact CAP-XX for details of our active balancing solution.

DC:DC Converter: The output voltage for the DC:DC converter is selected as follows:

- If the forward voltage required across the LED for a flash pulse > the max voltage the RF PA or GPRS module can operate at, then the o/p voltage of the DC:DC should be selectable depending on whether the phone is in Flash mode or Torch mode. In Flash mode the RF PA PWR FET is OFF to protect the RF PA, and the o/p voltage is set either with the DC:DC in current control mode to supply the Flash LED current or with the DC:DC o/p voltage sufficient so that there is enough forward voltage across the LED to be driven at the Flash current level. For a 1A Flash current the max o/p voltage required is ~5V. Torch mode is selected when the LED is OFF when the LED passes a continuous current, typically in the order of 100mA – 300mA for video capture & torch light. In Torch mode the DC:DC o/p voltage is set to drive the RF PA efficiently and to provide sufficient forward voltage to drive the LED at the lower Torch mode current. Torch mode voltage is typically 3.8V. The Solution B description in this App Note shows a circuit where the DC:DC o/p voltage is selectable.

- If the forward voltage needed across the LED at flash current levels is within the operating range of the RF PA or GPRS module, then the o/p voltage of the DC:DC can be set at a constant level. If this voltage level is too high to drive the RF PA efficiently, then the o/p voltage of the DC:DC can be selectable as described above, however, the RP PA PWR FET is not required.

Depending on the battery voltage range and the output voltage(s) of the DC:DC converter the DC:DC converter topology can be:

- If the max battery voltage (4.2V) is less than the maximum allowable voltage in Torch mode (current control block can dissipate the power when the LED is illuminated in Torch mode and 4.2V is within the maximum supply voltage for the RF PA), and the Torch mode o/p voltage is high enough such that the boost converter will be active for most of the battery run time, then a simple boost converter with will do. Referring to Fig 2, consider the case where the Torch mode o/p voltage = 3.8V.

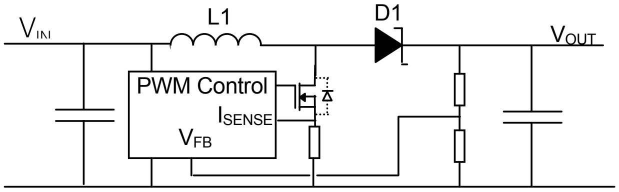

Figure 2: Standard Boost Converter

V_{D1} = the forward voltage across D1. When $V_{IN} < V_{OUT}-V_{D1}$ then D1 will not conduct and the boost will work normally. Typical value for V_{D1} is 0.3V. If V_{OUT} for Torch mode = 3.8V, then the boost will function normally when the battery voltage < 4.1V. When the battery is at 4.2V, then the PWM Control will sense that $V_{OUT} > 3.8V$ and will stop switching, then NFET will be OFF and L1, D1 will conduct so that V_{OUT} will be ~3.9V. Because this happens for only a small proportion of the total battery run time (i.e. when the battery > 4.1V) this inefficiency will not significantly reduce battery run time. When Flash mode is selected and V_{OUT} is ~5V the boost will work normally. This same scenario works with a synchronous boost converter where D1 is replaced by a PFET.

- If the maximum battery voltage is too high with respect to V_{OUT} in Torch mode to operate a standard boost converter as described above, then either a buck-boost converter can be used or a synchronous boost converter which uses the PFET as a linear regulator to control V_{OUT} when V_{IN} is too high. The TPS61020 from Texas Instruments is an example of this type of controller. Solution B has a description of a buck-boost design.
- You can use a Boost Converter in current control mode when in Flash mode where the o/p voltage will be whatever is required for the LED forward voltage. The Current Control Block will be hard ON for the duration of the flash pulse and OFF for the when the flash pulse is off. When in Torch mode, the boost converter reverts to Voltage Control mode and the Current Control block enables Torch mode current when required. If the battery voltage is too great relative to the Torch mode o/p voltage, then a buck-boost converter can be used for this design.

Current Control: When this is enabled the LED is turned ON. It also regulates the LED current for Flash and Torch modes. Solution B has a description of a Current Control block where the current is selectable.

RF PA PWR: This FET is only needed to disconnect the RF PA or GPRS module from V_{OUT} if V_{OUT} in Flash mode > than the maximum operating voltage for the RF PA / GPRS module. Otherwise connect the RF PA supply directly to V_{OUT}.

Warning: High peak inductor current. Note however, that the inductor current in solution A can be very high. The paragraph on Supercapacitor Selection above showed that the supercap voltage at the end of the flash pulse may be as low as ~2.5V. If the VOUT in Flash mode = 5V, with a 1A LED current and the DC:DC converter 85% efficient, then the average input current to the DC:DC converter = 2A x 5V/2.5V/85% = 4.7A. The peak inductor currents will be 15% - 20% higher $\approx$ 5.5A. In this case the FETs and inductor in the DC:DC converter would need to be sized for 5.5A which makes them both large and expensive. Solution B on the other hand, uses a supercapacitor with a smaller lower power DC:DC converter to support both the LED Flash and GPRS transmission.

Solution B: Supercapacitor at the output of a DC:DC converter

Fig 3 shows a block diagram of Solution B and Fig 4 shows a circuit implementation. This solution can support both white LED Flash and GPRS transmission. It requires a dual-cell supercapacitor and balancing circuit. There are two modes of operation: Flash mode, where the buck-boost converter charges the supercapacitor to $\approx$5.5V, or Torch mode where the supercapacitor is charged to the optimum voltage for the GPRS (typically 3.6V – 3.8V), and drives the LED at a lower continuous current, typically 200mA.
The circuit is described below:

Other Circuits: As in Solution A, low power logic circuits that are required to be active always, even when the phone is switched off, should be driven directly off the battery.

Controlling Voltage and Current for Flash and Torch Modes: In Fig 4, we select the buck-boost output voltage for Flash or Torch mode by controlling the FET in series with the 64K resistor, which modifies the ratio of the resistive divider at the FB input to the LTC3442. This FET is on for Flash mode, off for Torch mode. Similarly, we select the flash LED current by

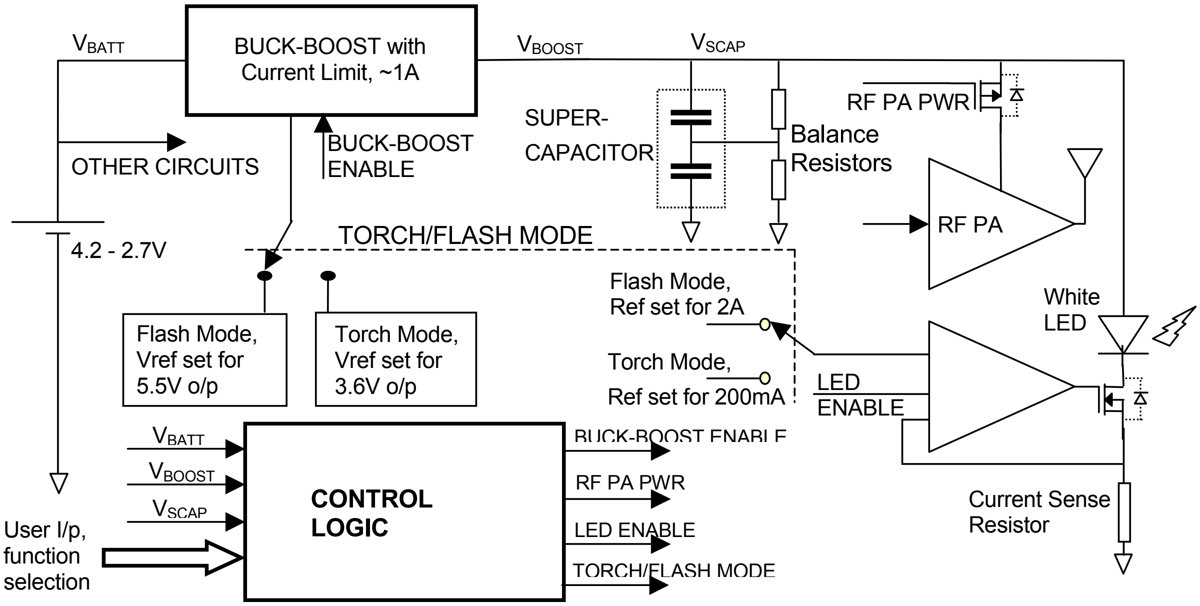

Figure 3: Solution B Block Diagram

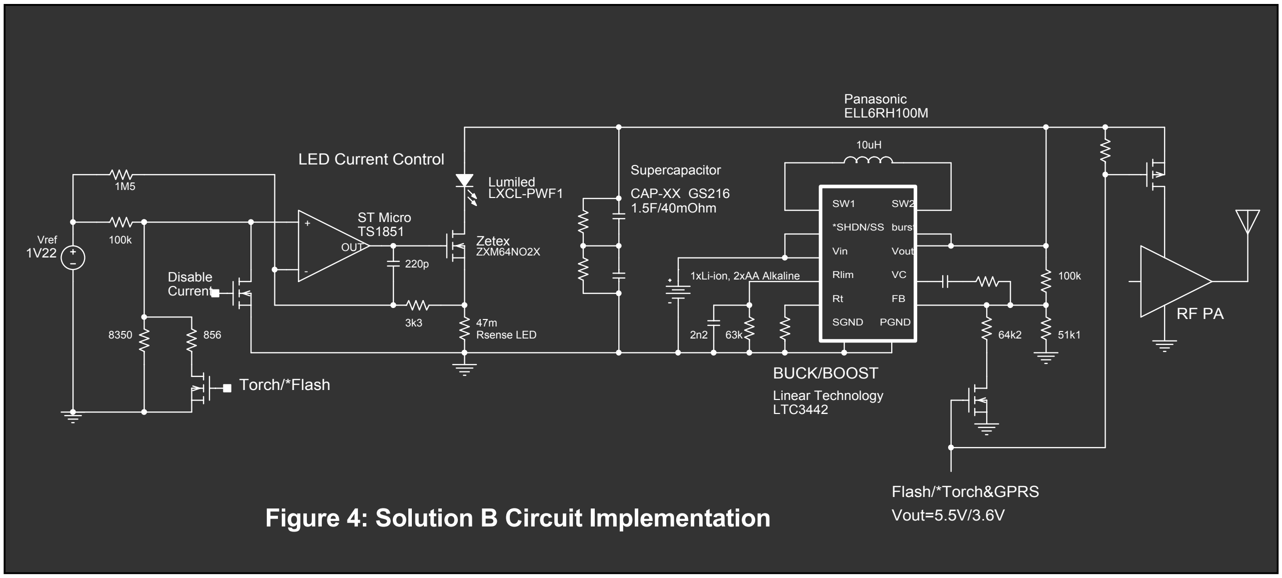

Figure 4: Solution B Circuit Implementation

controlling the FET in series with the 856Ω resistor to modify the ratio of the resistive divider across the voltage reference at the +ve input to the ST1851 op amp.

DC:DC Converter with inrush current limit: The buck-boost converter must have an input current limit to limit both the charge current to the supercapacitor and the maximum load current. The two cases of managing supercapacitor inrush current and maximum load current are considered below:

Inrush current when supercapacitor is discharged:

A simple boost converter does not limit inrush current, consider Fig 2. Due to its low ESR and high C, the supercapacitor across the boost output looks like a short circuit at power-up. When the supercapacitor is discharged, there is a low impedance path through L1 and D1. If the battery voltage = 3.7V, the battery pack impedance = 120mΩ, the supercapacitor ESR = 80mΩ, the DC resistance of L1 = 20mΩ, and the forward voltage across D1 = 0.3V, then the inrush current at the instant of connection = (3.7V-0.3V)/(120mΩ+80mΩ+20mΩ) = 15.5A! For the 1.5F supercap in Fig 4, the inrush current will still be ≈5A after 330msecs. We chose an LTC3442 because it uses a current mirror to sense current at the input to the inductor and turns off the FET between Vin and the inductor to limit current during startup and during normal operation. Also, a buck-boost efficiently manages the case when battery voltage > desired o/p voltage. An alternative IC that can be used is the TPS61020.

Excessive battery current under load:

Together, the boost converter and the supercapacitor supply the load current. To a first order approximation, the Boost output current/Supercap current = Supercap ESR/Boost output impedance. To avoid relying on the ratio of Boost output impedance:Supercap ESR to limit battery current, it is safer to limit the boost current since a boost converter with low output impedance could result in excessive battery current.

Since the flash pulse is at a very low duty cycle, typically 50-100msec every 1 – 2 secs in order to prevent the LED junction temperature from exceeding its maximum, the GPRS transmission load will set this limit.

In Torch mode, the supercapacitor supports the battery to power the RF PA or GPRS module and other high power consumption circuits through the optional FET labelled RF PA PWR in Fig 3. The battery supplies the average current and the supercapacitor supplies the peak current. This greatly reduces the voltage droop in the power supply to the GPRS module during transmission, extending talk time. The current limit should be set to with a slight margin above the average power. As an example, if the phone performs GPRS class 12 (50% duty cycle), and requires 2A peak during transmission, and other circuits drawing their power from the output of the DC:DC converter requires 100mA, then the DC:DC o/p current limit should be limited to > 1.1A. Let V_{BOOST} in Torch mode = 3.6V. Then if it is required that the unit operate with the battery voltage at 3.3V and the DC:DC is 85% efficient, the i/p current = 1.1A x 3.6V/3.3V/85% = 1.4A. Rlim in Fig 4 sets the average input current limit. From the LTC3442a data sheet, we have:

$$\boldsymbol{R}_{\lim}(\boldsymbol{K}\Omega)=\frac{70\times\left(0.86+\dfrac{2\boldsymbol{V}_{in}-\boldsymbol{V}_{out}}{40}\right)}{\boldsymbol{I}_{in}}=\frac{70\times\left(0.86+\dfrac{2\times3.3-3.6}{40}\right)}{1.4}=47\boldsymbol{K}\Omega$$

This limits the battery current to 1.4A.

Note: The pulse simulators (Fixed Power and Fixed Current spreadsheets) at http://www.cap-xx.com/resources/designaids/design_calc.htm calculate the supply voltage waveform for a given load, battery voltage, battery impedance and supercapacitor C & ESR.

Now, given the battery current limit check the charge time for the supercapacitor In Flash mode. The Flash mode V_{BOOST} was selected = 5.5V assuming that the LED forward voltage + voltage across the current sense circuit = 5V @ the 2A flash current. This allows the supercapacitor to discharge from 5.5V to 5.0V during the flash pulse. The time taken to re-charge the supercapacitor between flash photos calculated as follows:

Energy required to charge a 1.5F supercapacitor from 5.0V to 5.5V

$$= \frac{1}{2}\boldsymbol{C}\left(\boldsymbol{V}_{final}^{2} - \boldsymbol{V}_{initial}^{2}\right) = \frac{1}{2} \times 1.5 \times \left(5.5^{2} - 5.0^{2}\right) = 3.94\boldsymbol{J}$$

Assuming the loaded battery voltage = 3.3V with the input current limit set = 1.4A as above, and the DC:DC converter = 85% efficient, then the output power available

= 3.3 x 1.4 x 0.85 = 3.93W

Therefore the time to re-charge the supercapacitor between flash photos

= 3.94J/3.93W ≈ 1s.

This is less time than the typical flash LED thermal recovery time between flashes which is typically ≈ 2.5s[1], so LED thermal recovery, not supercapacitor charge time determines the minimum time between flash photos.

When changing from Torch mode to Flash mode, the time required before being able to take the first photo

= ½ x 1.5F x ($5.5V^2$ – $3.6V^2$)/3.93W = 3.3s

The flash pulse duration is limited by thermal constraints for the flash LED. For the LED chosen the max pulsewidth at 2A = 100msec.

RF PA PWR: Since the supercap is charged to 5.5V in Flash mode, the RF PA PWR FET is turned off to prevent over voltage damaging the GPRS module or any other high current consumption circuits. Hence, with this architecture it is not possible to connect to the network while using the flash. However, people are not usually making phone calls while taking pictures so this should not be a problem. When the phone is switched from Flash mode to Torch mode, the supercapacitor can be quickly discharged from 5.5V to the Torch mode voltage (in the example of Fig 1, 3.6V), by enabling the flash LED (in the examples of Fig 1 and 2, this draws 200mA from the supercap). The RF PA PWR FET in Fig 1 would only be turned on once the supercap had been discharged to the correct voltage.

Note: If the Flash mode value of V_{BOOST} is less than the maximum supply voltage allowed for the RF PA or GPRS module, then the RF PA PWR FET is not needed and the RF PA can be connected directly to V_{BOOST}.

Balancing circuit: See description in Solution A. The DC:DC converter can be turned off when the phone is off to limit battery energy loss due to leakage current from the supercapacitor and any other circuits.

---

[1] Luxeon Camera Flash Reference Design

Supercapacitor Selection: The supercapacitor C & ESR requirements are determined as follows (referring to Fig 4):

- Set final voltage for the supercap at the end of the flash pulse. From the Luxeon Flash LXCL-PWF1 Technical Datasheet and Reference Design the typical forward voltage @ 2A = 4.2V. The R_{DSON} for the ZXM64N02X current control FET = 50mΩ and the current control sense resistor = 47mΩ, therefore at 2A, the voltage drop across the current control circuit ≈ 200mV. Therefore, for a minimum supercap voltage = 5V, the current control circuit will work for all LEDs with a forward voltage ≤ 4.8V.
- Set the charge voltage for the supercapactor (V_{BOOST} in Flash mode). The maximum voltage for a 4.5V rated CAP-XX supercap is 5V. However, this is the minimum final voltage at the end of the flash pulse. Since the supercapacitor will only be at the boost voltage while the unit is in flash mode, set the buck-boost output = 5.25V. This will not significantly affect supercap life if it remains at this voltage for only a small percentage of its operating life. The camera phone logic should have a timeout so the user cannot inadvertently leave the unit in flash mode. (CAP-XX anticipates having supercapacitors rated to a maximum 5.5V by end 2005.)
- Determine the supercapacitor C & ESR. The voltage drop during the Flash LED pulse will consist of an IR drop plus capacitor discharge. For a 1.4A input current limit for the buck-boost as set above, the average maximum output current from the buck-boost during the Flash pulse = 1.4A x3.3V/(5.25V+5.0V)/2 x 85% = 0.77A. For a 2A Flash current, the voltage drop at the supercapacitor = (2A – 0.77A) x (ESR + Pulsewidth/C). This can easily be solved by selecting supercapacitor C & ESR values from the CAP-XX product bulletin and plugging them into the Fixed Current spreadsheet of our Voltage Decay Simulator at http://www.cap-xx.com/resources/designaids/CXX_VoltageDecaySim.xls Table 2a below shows the GS208 C & ESR values chosen using this design aid. For conservative design, verify the solution still works with double the ESR and ¾ the C values. Table 2b shows the solution is still valid (within 40mV).

ESR:	34	mOhm
Capacitance:	0.8	F
Load current:	1.23	A
Load duration:	0.1	secs
Initial Voltage	5.25	V
Voltage droop:	0.19557	V
Min voltage	5.05443	V
Time Step:	0.0001	Secs

Table 2a

ESR:	68	mOhm
Capacitance:	0.6	F
Load current:	1.23	A
Load duration:	0.1	secs
Initial Voltage	5.25	V
Voltage droop:	0.28864	V
Min voltage	4.96136	V
Time Step:	0.0001	Secs

Table 2b

Supercapacitor selection using Voltage Decay Simulator design tool, using values for GS208 and derating to allow for conservative design

Experimental Results: Fig 5 shows the battery current and voltage and supercapacitor voltage at power up. Referring to Fig 4, Rlim was set = 47KΩ for a nominal current limit = 1.4A. The supercapacitor used was a GS206 (550mF / 50mΩ). The results show the battery current was actually limited to 1.5A and the supercapacitor was charged to 4.5V in 1.6s. The Flash mode V_{BOOST} was set = 4.5V to drive 2 PWF1 LEDs in parallel at 1A each. Fig 6 shows a flash pulse with the combined LED current = 2A @ 4.5V = 9W but the battery current = 1.5A @ 3.7V = 5.5W. The supercapacitor has made up the 3.5W gap providing 0.26J and discharging from 4.5V to 4.3V during the 0.75ms pulse.

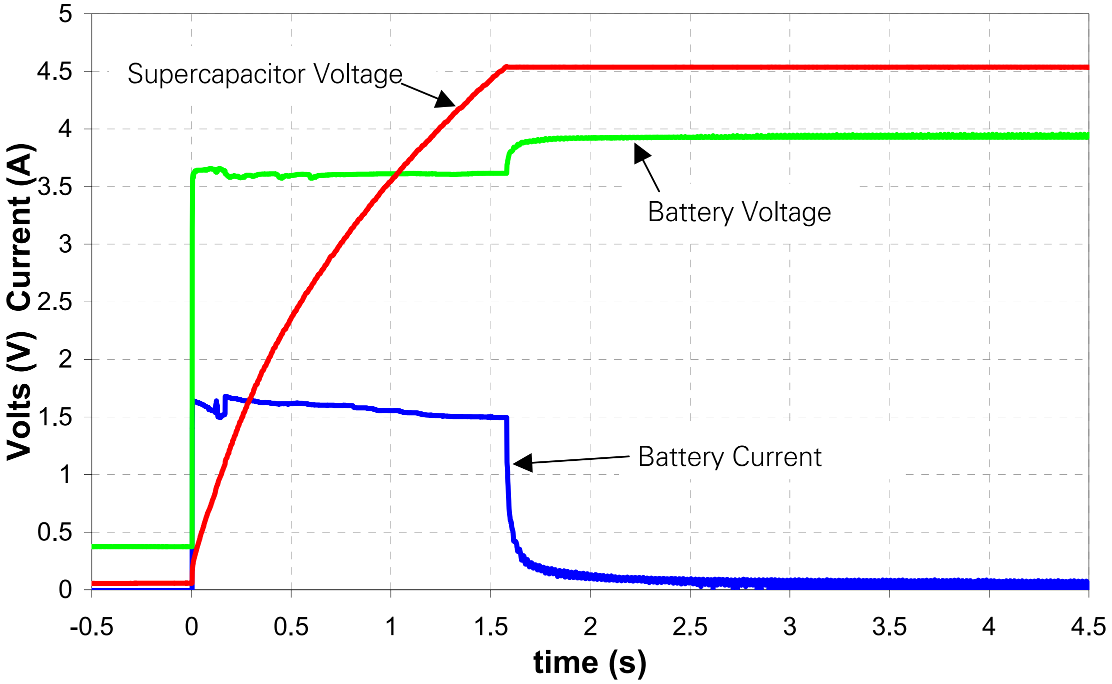

Figure 5: Solution B Inrush Current

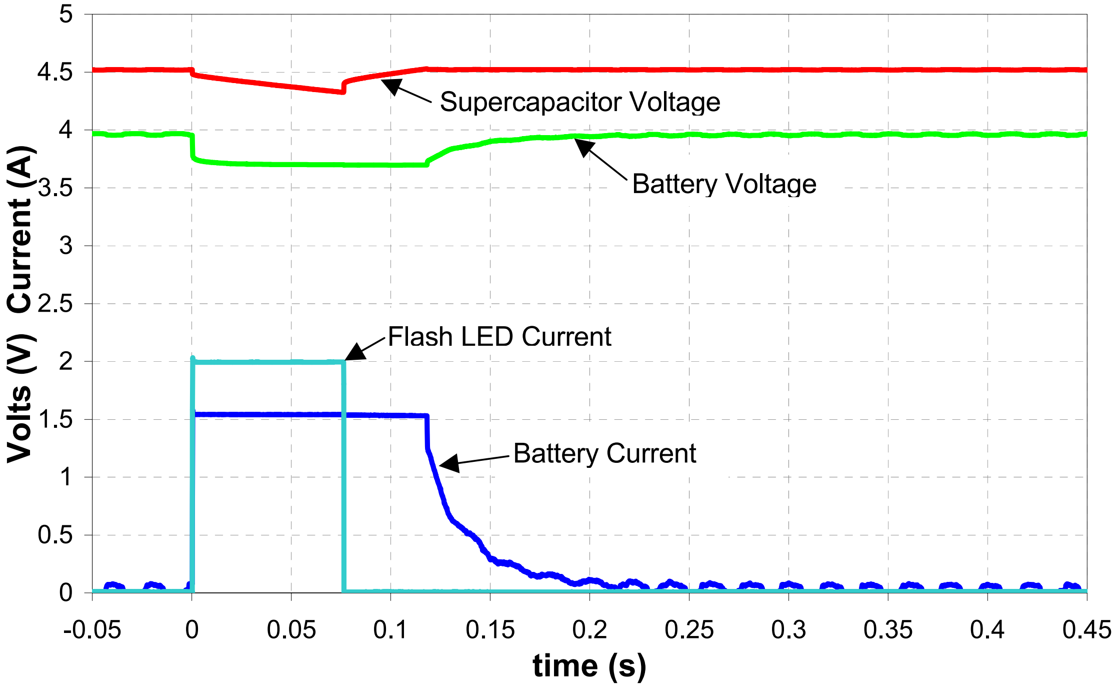

Figure 6: Solution B Flash LED Current

Solution C: Supercapacitor in series with the battery

Fig 7 shows a block diagram of Solution C and Fig 8 shows a circuit implementation. This solution only supports the white LED Flash – it does not help the battery during GPRS transmission. However, it only requires a single-cell supercapacitor which is much thinner and lower cost, a simple boost converter and no balancing circuit. There are two modes of operation: Flash mode, where boost converter charges the supercapacitor to ≈5.5V, or Torch mode where the boost converter is turned off and the LED can be driven directly from the battery at a lower continuous current, typically 200mA. The circuit is described below:

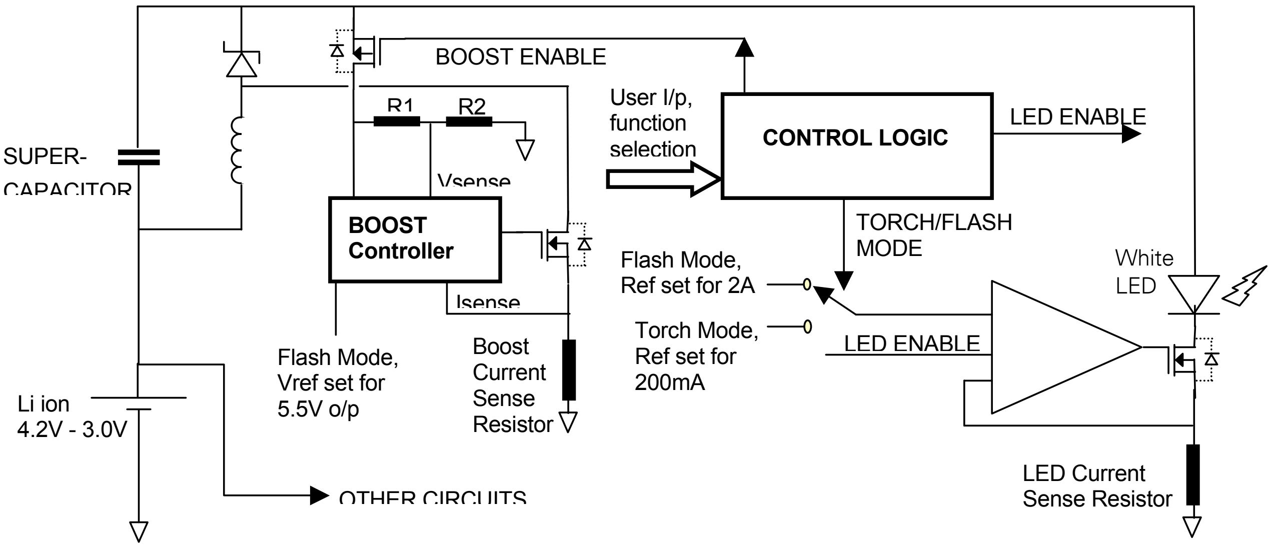

Figure 7: Solution C Block Diagram

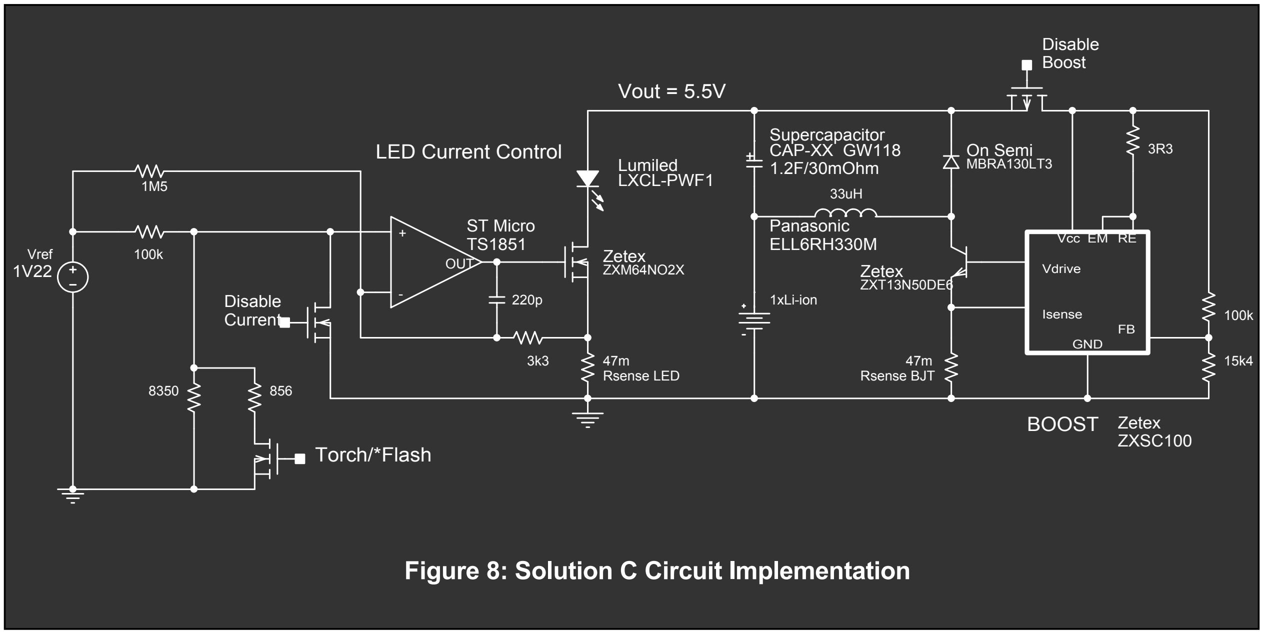

Figure 8: Solution C Circuit Implementation

The Flash LED draws ≈10W @ 2A, but the battery current = flash LED current so battery power is considerably less than flash LED power. If the battery voltage = 3.5V and the Flash LED current = 2A the battery only supplies 7W and the supercapacitor delivers the other 3W. Compare this to the problem description given in the beginning of this Application Note where the battery had to supply over 3A or 11.5W for a 2A Flash LED current.

Boost Converter: In Flash mode, the boost is enabled, and the current reference is set for full intensity. The supercapacitor is charged to ≈5.5V. The negative terminal of the supercap is at the battery voltage (3.3V – 4.2V), so the supercapacitor will be charged to have anywhere from 2.3V to 1.1V across it. This enables designers to use a much thinner supercapacitor compared to the one used in solution A or B. As in solution B, the boost converter has a current limit which is set so that the supercapacitor is charged to from 0V to 5.5V in reasonable time, and while in flash mode, the supercapacitor is charged from 5V to 5.5V in less time than the rest time the LED requires between flashes. Unlike solution B, there is no inrush current problem at power-up since the boost converter o/p voltage is always ≥ input voltage. We chose the Zetex ZXSC100 as the boost controller IC for its low cost and accuracy in setting the maximum current. The ZXSC100 has an internal reference = 25mV for the Isense input, so the 47mΩ current sense resistor sets the max current at approx 0.5A. If the battery voltage = 3.5V, then 0.5A switch current becomes 0.5A x 3.5V/5.5V x 85% = 0.27A o/p current. Therefore it will take 1.2F x (5.5V – 3.5V)/0.27A = 8.9s to charge the CAP-XX GW118 supercapacitor in Fig 8. Once charged to 5.5V, the supercapacitor will take 1.2F x (5.5V – 5.0V)/0.27A = 2.2s to recharge between flashes which is less than the thermal recovery time required by the flash LED. The boost converter is turned off during the flash pulse.

There is no balancing circuit since only a single cell supercapacitor is used

Supercapacitor Selection: The supercapacitor C & ESR requirements are determined as follows:

- The final voltage for the supercap at the end of the flash pulse = 5V, like solution B.
- Set the charge voltage for the supercapacitor (boost output voltage). The maximum voltage for a single cell CAP-XX supercapacitor = 2.5V. If the minimum battery voltage at which the flash LED is expected to work = 3.0V, then set the boost output voltage = 3.0V + 2.5V = 5.5V. Note however, that the flash is not active for most of the time (supercapacitor not charged) and when the phone is in Flash mode the battery voltage is > 3.3V for most of its run time, so the supercapacitor has > 2.3V across it for a small % of time, so supercapacitor life is
- Now determine the supercapacitor C & ESR. The IR drop at the leading edge of Flash LED pulse = LED current x (ESR of supercap + battery impedance). In Fig 7, this = 2A x (30mΩ + 125mΩ) = 310mV. This leaves 5.5V – 5.0V - 310mV = 190mV for supercapacitor discharge to achieve a final voltage ≥ 5.0V. This gives C = 2Ax100msecs/190mV = 1.05F. Therefore, for a supercapacitor with 30mΩ ESR and battery impedance = 125mΩ, we need a supercapacitor with C > 1.05F for the voltage at the end of the flash pulse to be ≥ 5.0V. The CAP-XX GW119 has ample headroom. Note: These equations are solved in the VoltageDecay Simulator (Fixed Current sheet) at http://www.cap-xx.com/resources/designaids/CXX_VoltageDecaySim.xls Table 3a shows the results for a

GW119 and Table 3b shows the results with the supercapacitor ESR doubled and ¾ C. Note that in the ESR cell, add the battery pack impedance to the supercapacitor ESR.

ESR:	159	mOhm
Capacitance:	1.9	F
Load current:	2	A
Load duration:	0.1	secs
Initial Voltage	5.5	V
Voltage droop:	0.423263	V
Min voltage	5.076737	V
Time Step:	0.0001	Secs

Table 3a

ESR:	193	mOhm
Capacitance:	1.425	F
Load current:	2	A
Load duration:	0.1	secs
Initial Voltage	5.5	V
Voltage droop:	0.526351	V
Min voltage	4.973649	V
Time Step:	0.0001	Secs

Table 3b

Supercapacitor selection using Voltage Decay Simulator design tool, using values for GW119 and derating to allow for conservative design

Experimental Results: Fig 9 shows battery voltage, battery current and supercapacitor voltage during charge up to when the unit changes from Torch mode to Flash mode. Fig 10 shows battery voltage, battery current, supercapacitor voltage and LED current during a 2A 75msec flash pulse using a GW109 supercapacitor. Battery charge current is limited to 200mA and the supercapacitor is charged after 1.1s. During the flash pulse battery current = LED current = 2A but the LED drew on average 10W while the battery supplied 7.2W. The supercapacitor made up the gap while discharging from 5.7V to 4.5V. 4.5V was sufficient to drive the LED @ 2A. The supercapacitor was re-charged after a flash pulse and ready for the next flash photo after 0.57s.

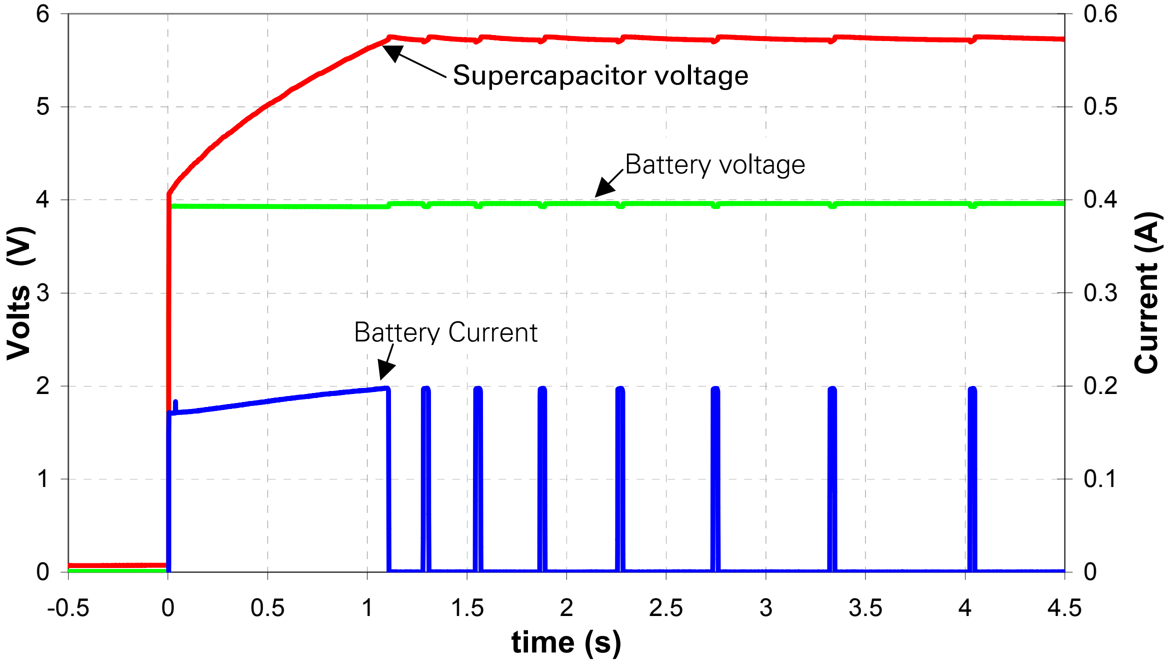

Figure 9: Solution C charging

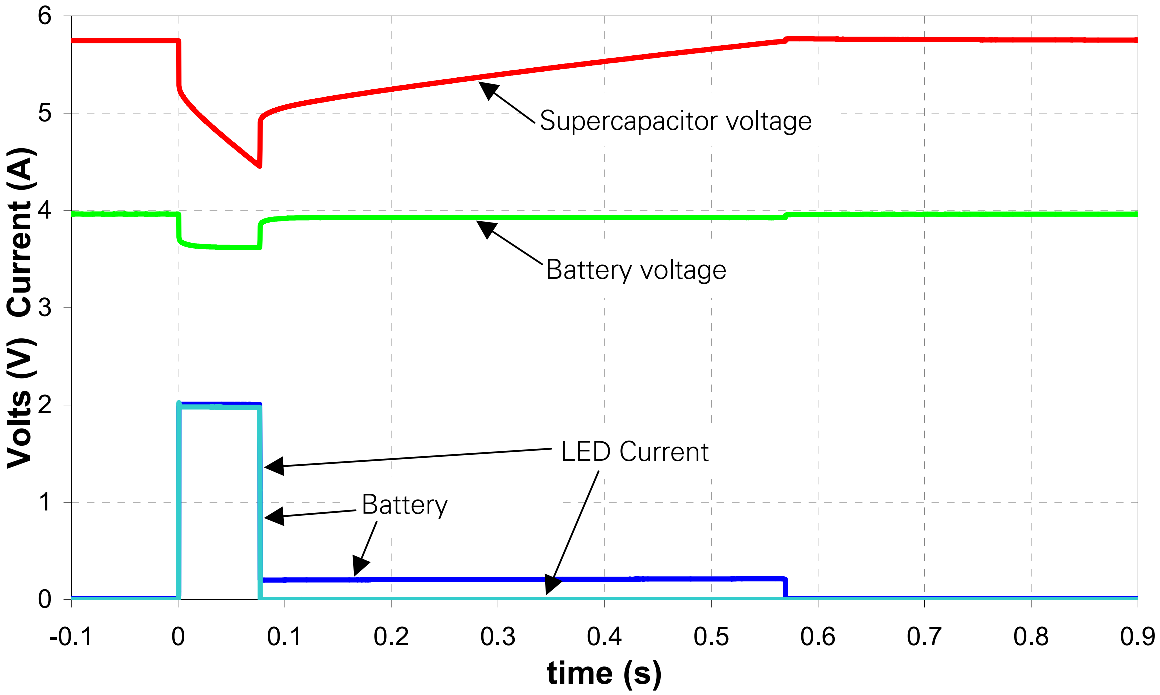

Figure 10: Solution C Flash Pulse

Fig 11 compares battery current for the different power architectures discussed. The “No supercap” case has the battery at the input of a boost converter supplying the LED. The typical and maximum battery current curves for this case correspond to the forward voltage range of the LED. For solution B, the battery current is constant and set by the buck-boost converter input current limit. For solution C, battery current = LED current, but LED power >> battery power and the supercapacitor provides the difference.

The table below summarizes the features and benefits of the solution B & C. Solution A, which can suffer from very high peak inductor currents is not included in this comparison.

Solution B	Solution C
Flash LED can draw 10W, but the battery current is limited to the buck-boost converter input current limit, ~ 1A – 2A, the supercapacitor makes up the power difference and enables full flash light intensity	Flash LED can draw 10W, but the battery current is limited to the LED current, so the battery only supplies 7W – 8W and the supercap supplies the difference
Supercapacitor supports other high power consumption circuits such as the GPRS module	Supercapacitor only supports Flash LED
Buck-boost converter required since battery voltage may be greater than or less than supercap voltage. Designer can use a boost converter with logic to control a bypass FET.	Simple boost converter only required

Buck-boost converter must limit inrush current when supercapacitor is fully discharged	No inrush current problems with fully discharged supercapacitor
Dual cell supercapacitor required with balancing circuit.	Single cell supercapacitor which is thinner, lower cost, requires no balancing circuit and draws no balancing circuit current

A CAP-XX supercapacitor has the high C, low ESR, and thin prismatic form factor that offers a practical solution for providing the pulse power required for flash photography using the high intensity white LEDs available today.

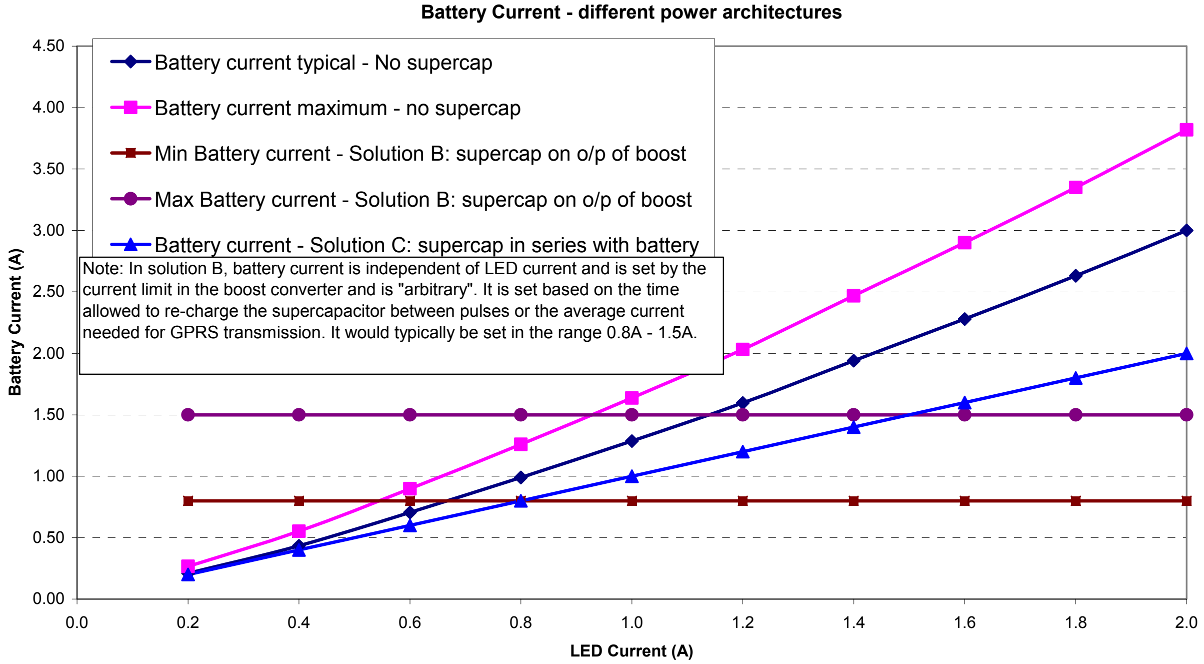

Note: In solution B, battery current is independent of LED current and is set by the current limit in the boost converter and is "arbitrary". It is set based on the time allowed to re-charge the supercapacitor between pulses or the average current needed for GPRS transmission. It would typically be set in the range 0.8A - 1.5A.

Figure 11: Battery current for different power architectures

Further Information

CAP-XX will be pleased to provide further information on the applications described here, and on the use of supercapacitors in any application. Please use the contact details on the header page, or visit the CAP-XX web site.